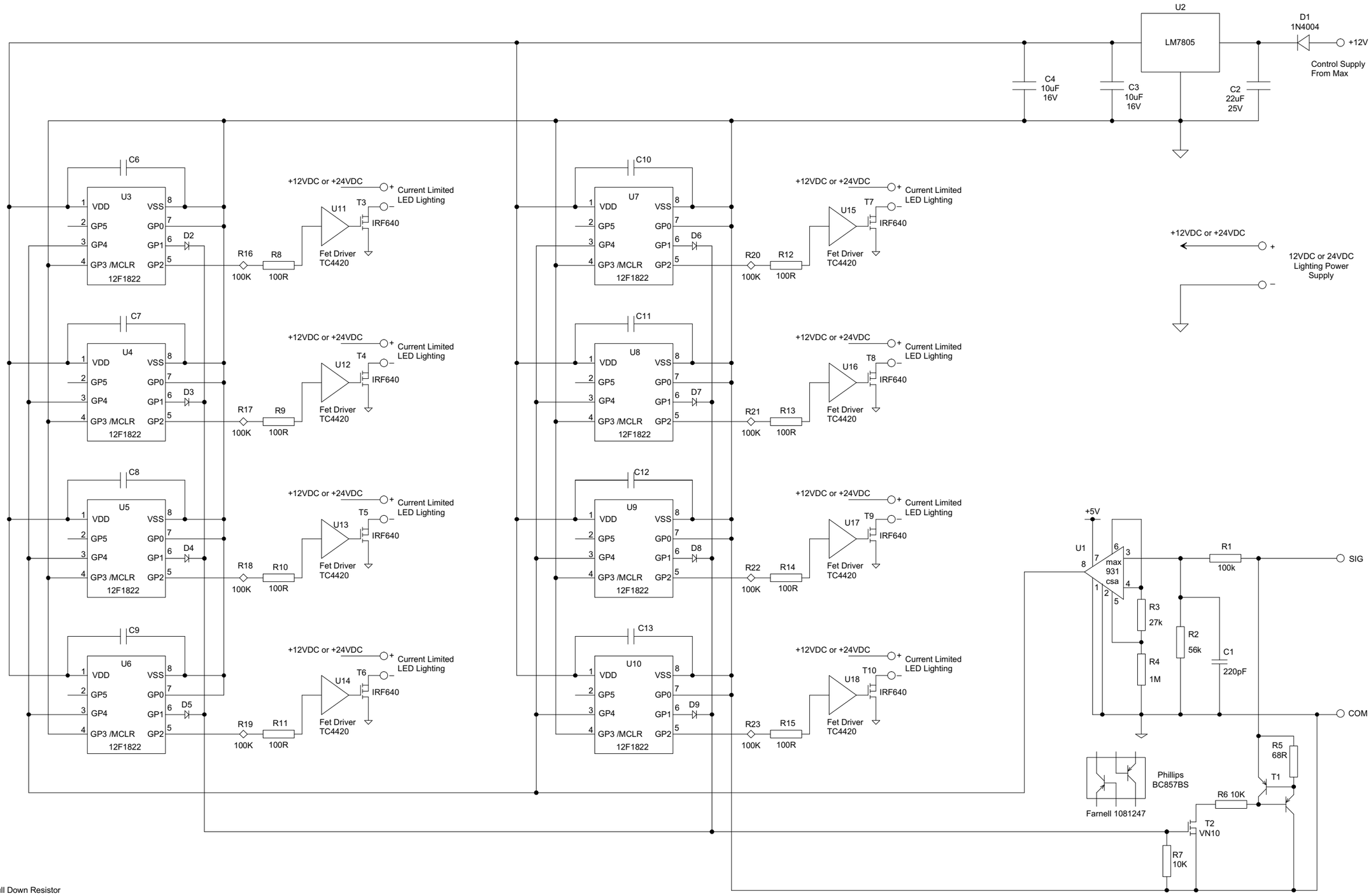

◇ Denotes Pull Down Resistor

			Copyright 2009 by Jasdip Pty Ltd. All rights reserved. No reproduction without written permission.	TITLE JMAX HOME AUTOMATION 8 CHANNEL LED LIGHT DIMMING CONTROLLER 2 WIRE SIGNAL DRIVEN	DATE 27-09-2009	CHKD	REV No 0
					DESIGNER PO	APPROVED	DRAWING No JMAX_011
0	ISSUED FOR CONSTRUCTION	30/10/09		Jmax2_rx_8DC.dsf			

JASDIP
PO Box 10247
Mt Pleasant, Qld, 4740
Phone 0419 710 991
paulo@jasdip.com.au